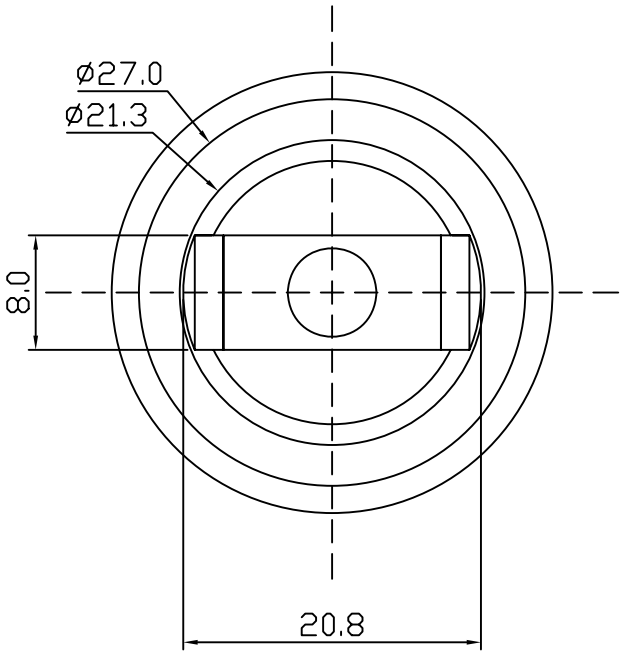
ø27.0
ø21.3
8.0
20.8

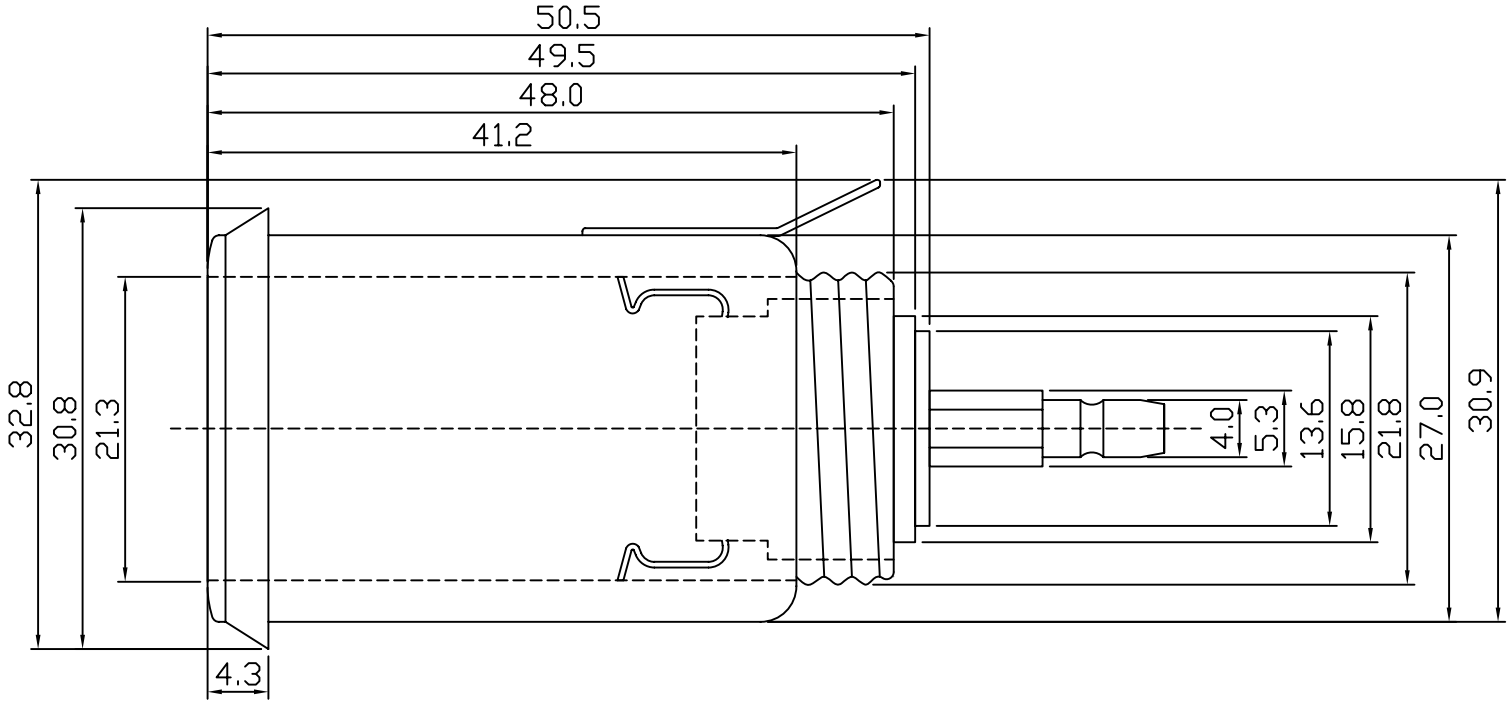
50.5
49.5
48.0
41.2
32.8
30.8
21.3
4.3
4.0
5.3
13.6
15.8
21.8
27.0
30.9